To. :

DATE : 20 . . .

RoHS 1,2 and 3	Halogen Free

SPECIFICATION

PRODUCT : STARCAP

MODEL : SM series

(SM3R3333T01)

WRITTEN	CHECKED	APPROVED

KORCHIP CORP.

KORCHIP B/D, 359, Manan-ro, Manan-gu, Anyang-si, Gyeonggi-do, KOREA

TEL : 82 - 31 - 361 - 8000

FAX : 82 - 31 - 361 - 8080

Index

Page No.	ITEM	etc.
1	Cover Page	
2	Index	
3	Revision History, Manufacturer Information	
4	1. Scope	
	2. Part Number System	
	3. Photo	
	4. General Specifications	
5	5. Cell Structure	
6	6. Product Construction and Dimension	
7	7. Carrier Tape Construction and Dimension	
8	8. Taping Construction and Dimension	
9	9. Packing Specifications	
10	10. Labeling Standards	
11	11. Reliability Specifications	
12	12. Measuring Method of Characteristics	
13	13. Reflow Soldering	
	14. Manual Soldering	
14-15	15. Cautions for Use	
16	16. Leakage Level Criteria	
17	17. Environmental Management	

Revision History

No.	Documentation	Check	Description of Revision	Approval	Date
1	S.H. Song (R&D)	K.B. Chung (Q.A.)	Initial Release	B.I. Lim (R&D)	Nov. 12 2020

Manufacturer Information

Manufacturer : Korchip Corporation

Location : KORCHIP B/D, 359, Manan-ro, Manan-gu, Anyang-si, Gyeonggi-do, KOREA

Tel. : +82-31-361-8000

Fax. : +82-31-361-8080

1. Scope

This specification applies to STARCAP(Electric Double Layer Capacitor), submitted to specified customer in cover page.

2. Part Number System

SM	3R3	333	T01
①	②	③	④

① Series Name
② Rated Voltage : 3.3VDC
③ Capacitance : 0.033 F (333 = 33 × 10^{+3} uF)
④ Terminal Type : T01-type

3. Photo



AND/OR



4. General Specifications

ITEMS	VALUE
Cell Size	Ø3.8 × 1.1mm
Operating Temperature	-10 ~ +60 ℃
Rated Voltage	3.3 VDC
Electrostatic Capacitance	0.033 F
Capacitance Tolerance	-20 ~ 80 %
Discharge Capacity	11.9 uAh (3.3V~2.0V) / 13.8 uAh (3.0V~1.5V)
Equivalent Series Resistance (ESR)	Less than 300Ω

5. Cell Structure

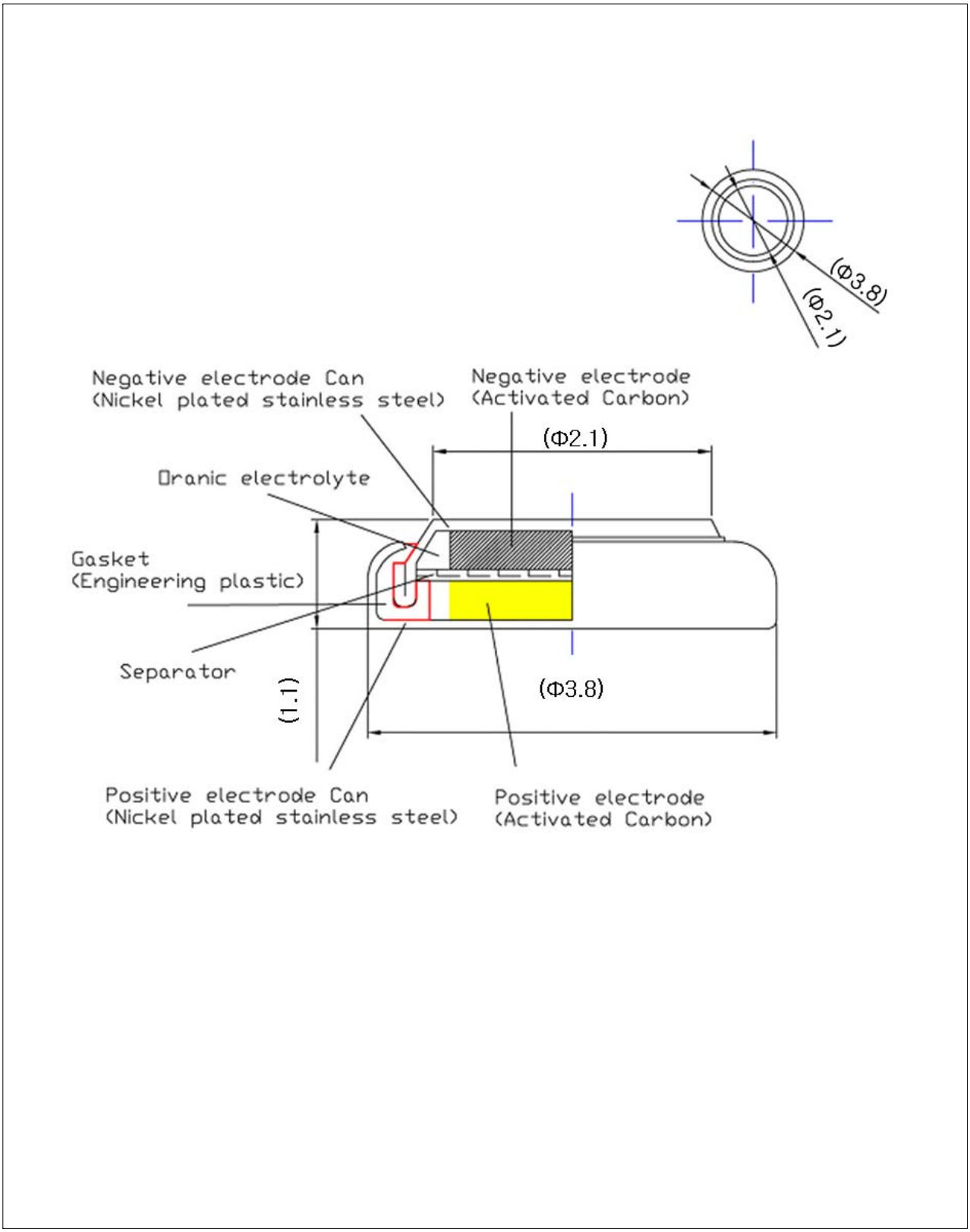

6. Product Construction and Dimension

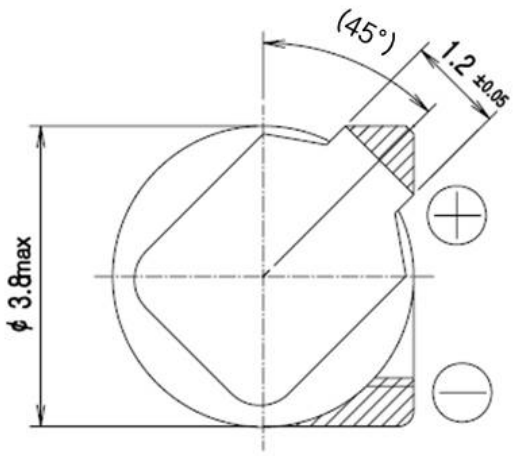

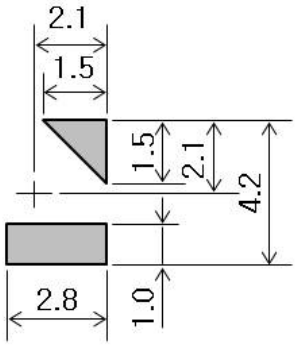

Recommended PCB Layout
Tolerance (less than 0.05)

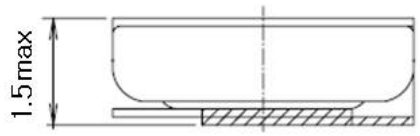

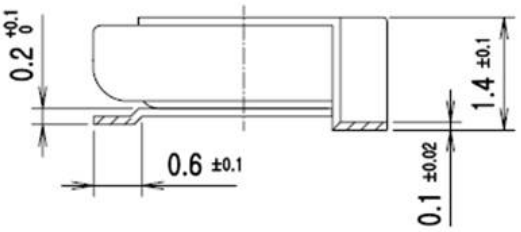

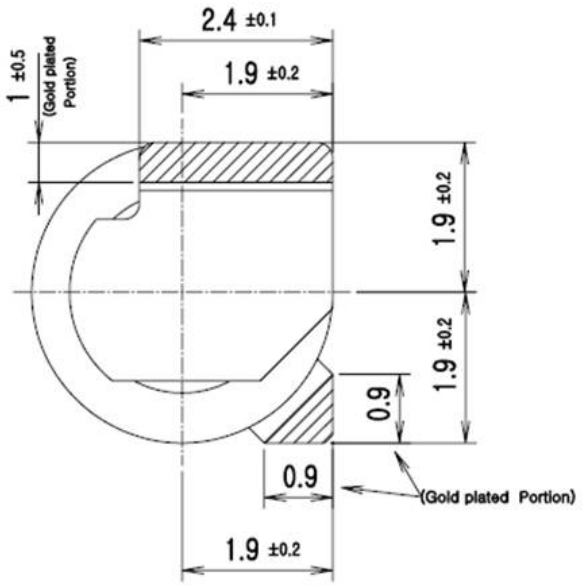

7. Carrier Tape Construction and Dimension

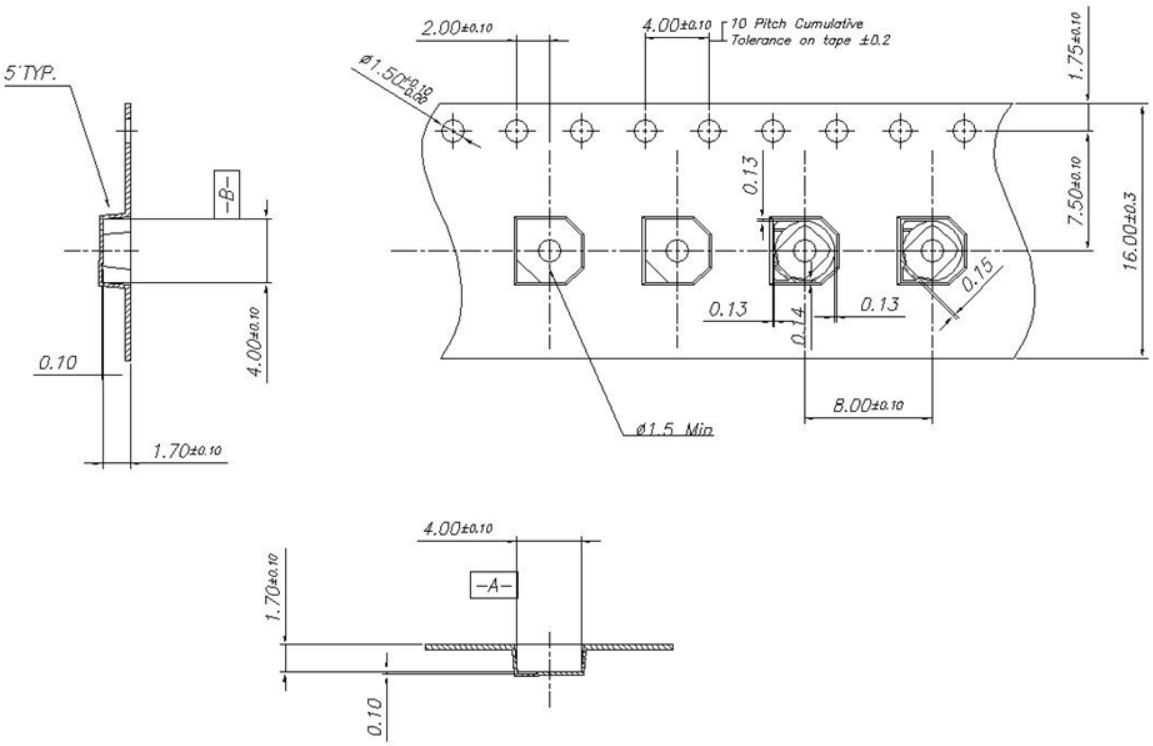

8. Taping Construction and Dimension

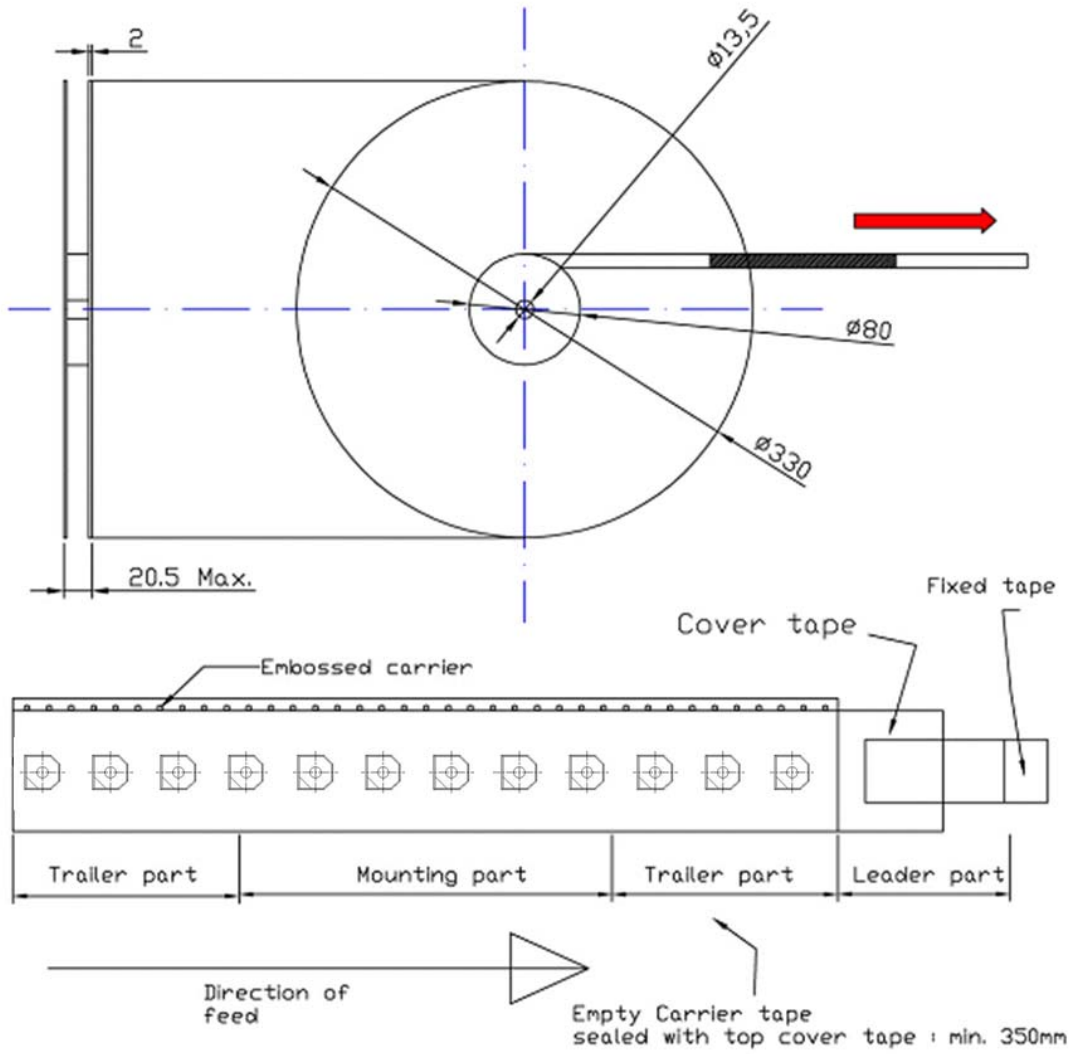

9. Packing Specifications

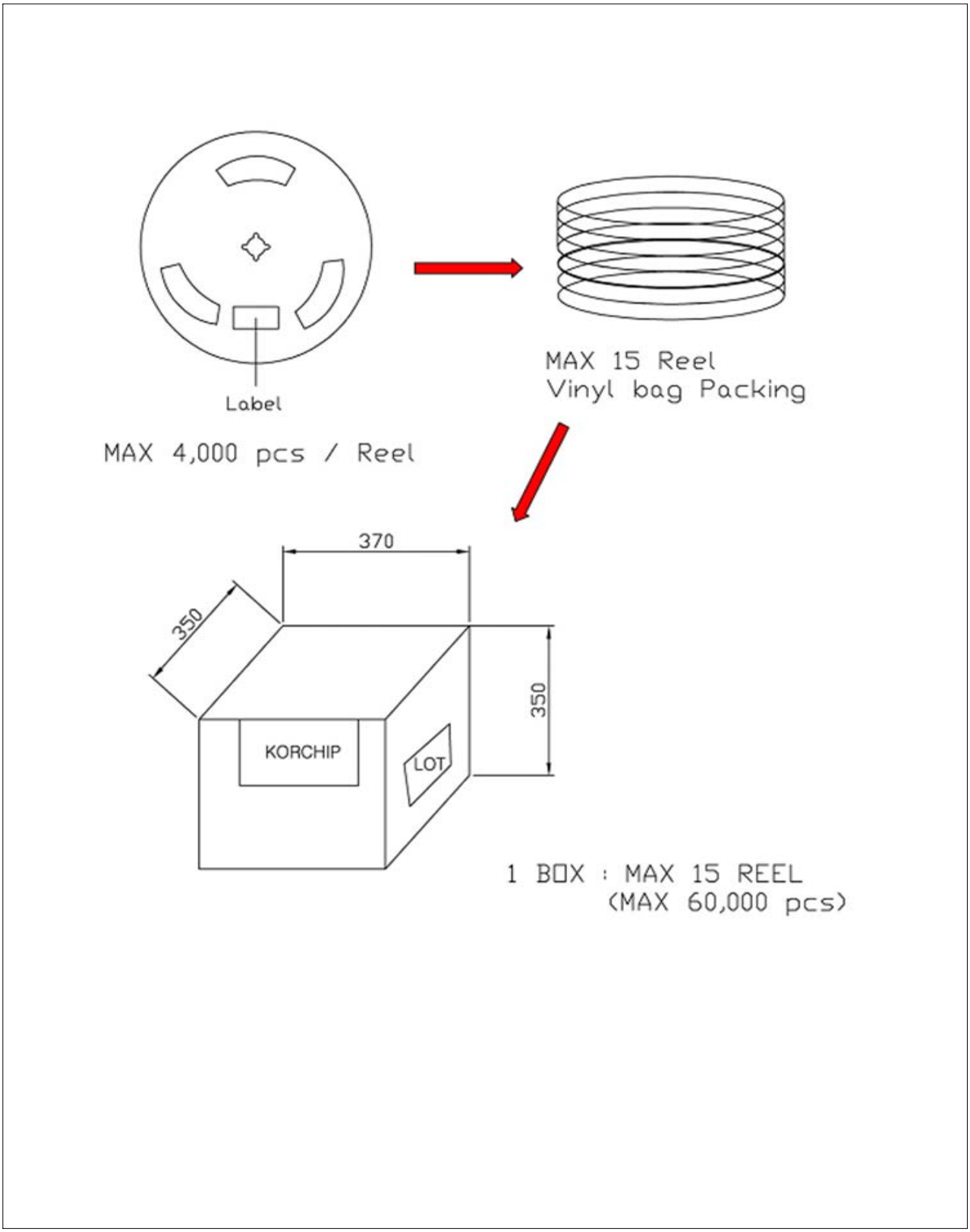

10. Labeling Standards

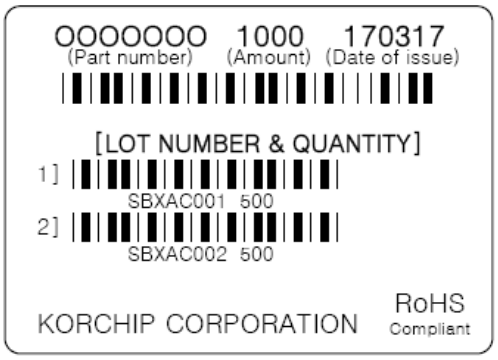

← **(Example)**

Lot No. System

Ex.) S E X A C 002

① ② ③ ④ ⑤ ⑥

① Product Code : S (STARCAP)

② Production Year Code : A (2016), B (2017), C (2018), D (2019), E (2020)…

③ Factory Identification Code : X (Factory X)

④ Production Month Code : A (Jan.), B (Feb.), … , J (Oct.), K (Nov.), L (Dec.)

⑤ Production Date Code : 1 (1st), 2 (2nd), … , 9 (9th), A (10th), B (11th), C (12th) …
Q (26th), R (27th), S (28th), … , V (31th)

⑥ Lot Issuing Serial Code : 001 (First lot of a specific day), 002 (Second lot of a specific day), 003 (Third lot of a specific day)…

11. Reliability Specifications

<table>
<tr><th colspan="3">Item</th><th>Specification</th><th>Test Condition</th></tr>
<tr><td rowspan="6">Temperature Characteristics</td><td rowspan="2">Step 2</td><td>Capacitance Change</td><td>Within ± 80% of Initial Value</td><td rowspan="6">Measure electrical characteristics after exposing STARCAP Capacitor to each temperature atmosphere for one(1) hour
<table><tr><th>Step</th><th>Temperature</th></tr><tr><td>1</td><td>20± 2℃</td></tr><tr><td>2</td><td>-10± 2℃</td></tr><tr><td>3</td><td>20± 2℃</td></tr><tr><td>4</td><td>60± 2℃</td></tr><tr><td>5</td><td>20± 2℃</td></tr></table></td></tr>
<tr><td>ESR</td><td>6000Ω or Less</td></tr>
<tr><td rowspan="2">Step 4</td><td>Capacitance Change</td><td>Within ± 30% of Initial Value</td></tr>
<tr><td>ESR</td><td>400Ω or Less</td></tr>
<tr><td rowspan="2">Step 5</td><td>Capacitance Change</td><td>Within ± 10% of Initial Value</td></tr>
<tr><td>ESR</td><td>Spec. Value</td></tr>
<tr><td rowspan="2">Reflow Soldering Effect</td><td colspan="2">Capacitance</td><td>Spec. Value</td><td rowspan="2">Pb-Free Reflow Solder
Peak Temp. : 260± 5℃
Duration at Peak Temp. : 5± 0.5sec.</td></tr>
<tr><td colspan="2">Appearance</td><td>No Marked Defect (Level 2* or less)</td></tr>
<tr><td rowspan="3">Humidity Resistance</td><td colspan="2">Capacitance Change</td><td>Within ± 10% of Initial Value</td><td rowspan="3">Temp. : 40± 2℃
Humidity : 90 ~ 95%RH
Time : 240± 8 Hours
<u>No Voltage Applied</u></td></tr>
<tr><td colspan="2">ESR</td><td>360Ω or Less</td></tr>
<tr><td colspan="2">Appearance</td><td>No Marked Defect (Level 2* or less)</td></tr>
<tr><td rowspan="3">Cycle Characteristics</td><td colspan="2">Capacitance Change</td><td>Within ± 50% of Initial Value</td><td rowspan="3">Temp. : 25± 2℃
Cycle No. : 10,000
Charge Voltage : 3.3Vdc
Resistance : 100Ω, Time : 9min.
Discharge Resistance:100Ω,
Time:1min.</td></tr>
<tr><td colspan="2">ESR</td><td>4000Ω or Less</td></tr>
<tr><td colspan="2">Appearance</td><td>No Marked Defect (Level 2* or less)</td></tr>
<tr><td rowspan="3">Vibration Resistance</td><td colspan="2">Capacitance</td><td>Spec. Value</td><td rowspan="3">Amplitude : 1.5㎜
Frequency : 10 ~ 55㎐
Direction : X, Y, Z 3 Directions
Test Time : 6 Hours</td></tr>
<tr><td colspan="2">ESR</td><td>Spec. Value</td></tr>
<tr><td colspan="2">Appearance</td><td>No Marked Defect (Level 2* or less)</td></tr>
<tr><td>Terminal Strength</td><td colspan="2">Appearance</td><td>Terminals shall not be separated</td><td>Load 1kg , 10±1 Sec.</td></tr>
<tr><td rowspan="3">Endurance</td><td colspan="2">Capacitance Change</td><td>Within ± 50% of Initial Value</td><td rowspan="3">Temp. :60± 2℃
Test Time : 500(+24, -0) Hours
Applied Voltage : 3.3Vdc</td></tr>
<tr><td colspan="2">ESR</td><td>4000Ω or Less</td></tr>
<tr><td colspan="2">Appearance</td><td>No Marked Defect (Level 2* or less)</td></tr>
<tr><td rowspan="3">Shelf Life</td><td colspan="2">Capacitance Change</td><td>Within ± 50% of Initial Value</td><td rowspan="3">Temp. :60± 2℃
Test Time : 500(+24, -0) Hours
<u>No Voltage Applied</u></td></tr>
<tr><td colspan="2">ESR</td><td>4000Ω or Less</td></tr>
<tr><td colspan="2">Appearance</td><td>No Marked Defect (Level 2* or less)</td></tr>
</table>

***** Refer to "15. Leakage Level Criteria" on page 16

12. Measuring Method of Characteristics

<table>
<tr>
<td>Capacitance</td>
<td>
1) Charge the STARCAP with constant current I_{charge}(=1±0.1㎃) to V_{charge}(=3.3V) then keep charging for T_{charge}(=2400sec.)
2) Discharge the STARCAP with constant current I_{disch}(=0.5㎃) while measure the discharge time T_1, T_2 between V_1(=2.64V) and V_2(=1.32V).
3) Calculate capacitance using the following formula.
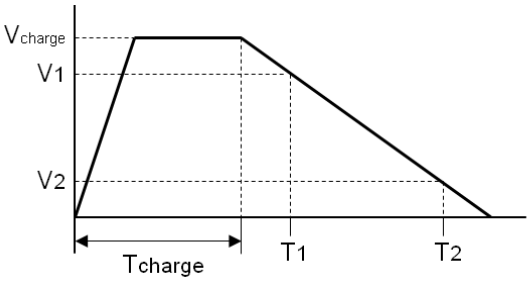

$$C = \frac{I_{disch} \times (T_1 - T_2)}{V_1 - V_2}$$
</td>
</tr>
<tr>
<td>Equivalent Series Resistance (ESR @1kHz)</td>
<td>
● Measure ESR by the LCR meter. (Frequency:1㎑, Bias Voltage : $0^{+0.05}$V)
or
● Calculate ESR using the following formula.
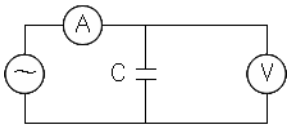

ESR[Ω] = V / i
R[Ω] = V[V] / I[A] * i[uA] = I[A] x 10^{-6}
R : Internal resistance(ESR) [Ω]
V : Measured voltage between terminals [V]
i : Current 10uA(A.C.)
</td>
</tr>
<tr>
<td colspan="2">☞ THE STARCAP SHOULD BE SHORTED BEFORE EACH MEASUREMENT AS FOLLOWS ;
CAPACITANCE : 60 MIN. , ESR : 15 MIN. , LC : 15 MIN.</td>
</tr>
</table>

13. Reflow Soldering

Excessive heat stress may result in the deterioration of the electrical characteristics of the capacitor, loss of air tightness, and electrolyte leakage due to the rise in internal pressure. Use the general reference chart then set soldering temperature and time.

Max. 260℃ (within 5 seconds)

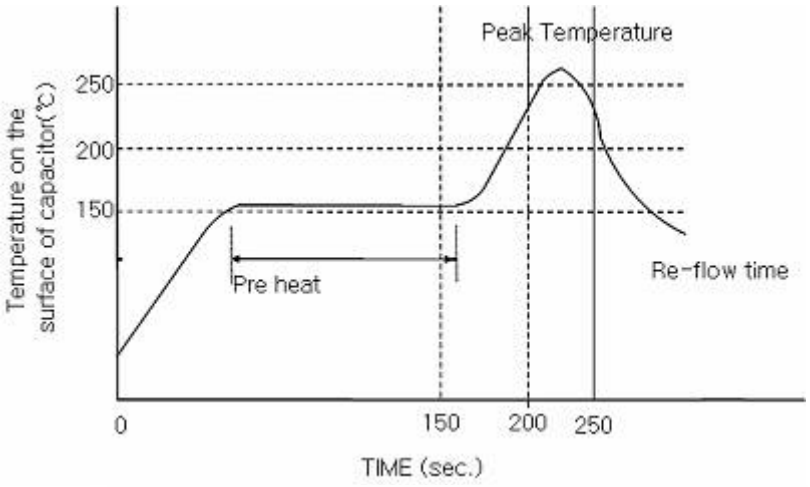

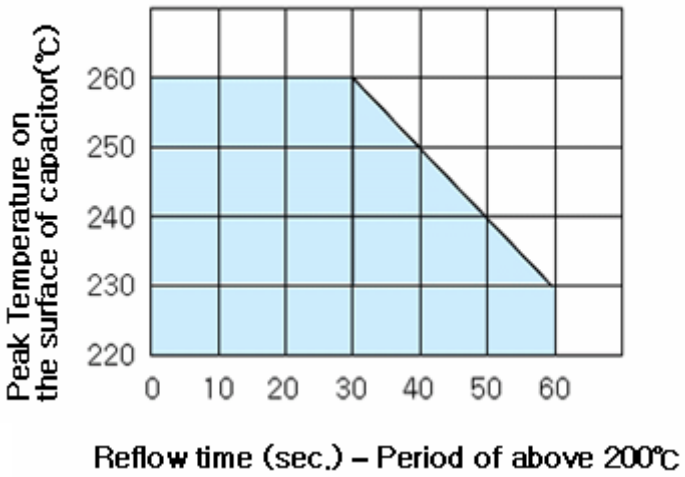

The time of repeated reflow soldering must be two times or less.

Time above 200℃ should be less than 80 seconds.

Do not use reflow soldering when the cell voltage is above 0.3V.

14. Manual Soldering

For use of a soldering iron, it should **not touch the cell body**.

Temperature of the soldering iron should be less than 350℃.

Soldering time for terminals should be less than 3 seconds.

15. Cautions for Use

Please be careful for following points when you use STARCAP.

1) Do not apply more than rated voltage.

If you apply more than rated voltage, STARCAP's electrolyte will be decomposed and its ESR increase. At the worst, it may be broken.

2) Do not use STARCAP for ripple absorption.

3) Polarity

Please mount it in accordance with its polarity.

4) Operating environment and lifetime

STARCAP shows faster deterioration in high temperature operation. The lifetime of STARCAP follows the general lifetime acceleration rule of double or half per every 10℃ of ambient temperature decrease or increase respectively. A large temperature difference in one day or humid operating environment results in dew condensation on the surface of STARCAP and it may cause fast deterioration or electrolyte leakage of STARCAP.

If STARCAP capacitor is used in an electronic or electrical device over a long period of time especially in high temperature or high humidity environment, please check it periodically and replace it when necessary.

5) Cleaning

Some detergent or high temperature drying causes deterioration of STARCAP.
If you wash STARCAP, Consult us.

6) Following figure shows the general back-up circuit.

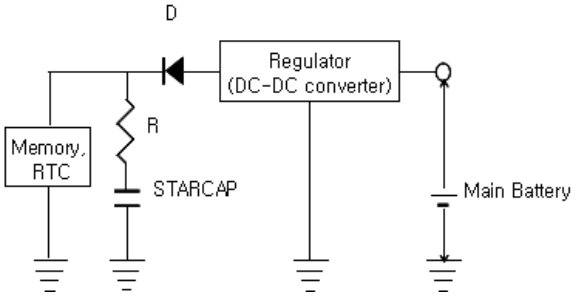

D : Diode to prevent the reverse current
R : Resistor to control the charging current

7) Short-circuit STARCAP

DO NOT short-circuit between terminals of STARCAP without resistor.

8) Storage

In long term storage, please store STARCAP in following condition;

① TEMP. : 10 ~ 30 ℃

② HUMIDITY : 60 %RH or less

③ Non-dust, non-acidic and/or non-alkaline atmosphere

④ Avoid direct sun light, strong magnetic field

Storage period limit is one(1) year when a STARCAP is stored in the above condition. Storage in improper condition may cause some damage to STARCAP. If the storage period exceed one(1) year in the customer's warehouse, please contact the manufacturer.

9) Do not disassemble STARCAP. It contains electrolyte.

10) Series connection of STARCAP

Over-rated voltage may be applied to a single STARCAP in series connection due to the deviation of capacitance and ESR of each STARCAP. Please inform us if you are using STARCAP in series connection and please design so as not to apply over-rated voltage to each STARCAP, and use STARCAPs from same lot.

11) The tips of STARCAP terminals are very sharp. Please handle with care.

12) Industrial Application

Some industrial applications require a very high level of reliability to its parts including EDLCs. Therefore if the EDLC is to be used in an industrial application such as factory machinery, heavy electricity, etc. periodic inspection of EDLC is necessary. If there found any problem with the EDLC, please replace it.

13) Use of Functional Coating Chemicals

Some solvents of functional coating chemicals which applied on the same PCB with the STARCAP EDLC may cause undesired effects on the EDLC such as surface oxidation or electrolyte leakage. When apply those chemicals, be careful of not coating the EDLC's surface.

16. Leakage Level Criteria

Level	Appearance of Leakage	Definition
Level 1	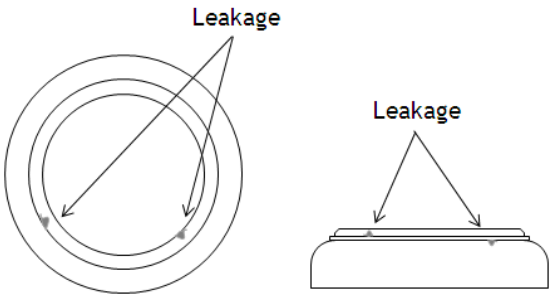	Leakage can not be recognizable with naked eyes, it can be recognizable only by microscope (magnification of 10 or more)
Level 2	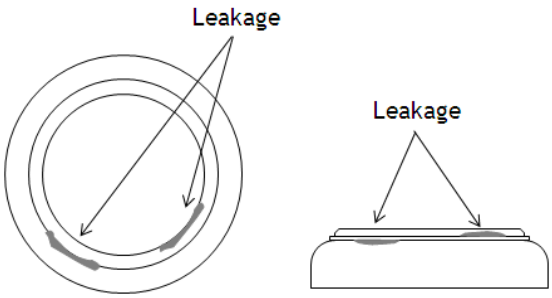	Leakage can be recognizable by naked eyes. But there is no bridge between cap(-) and case(+).
Level 3	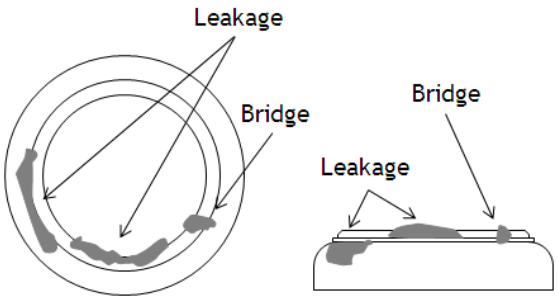	Leakage reaches the flat line of cap(-) or flow down to side of case(+). Leaked bridge between cap(-) and case(+) is observed.

17. Environmental Management

All STARCAP products are RoHS 1, 2 and 3 compliant, Halogen Free and environment friendly.

Series	RoHS 1,2 directive (Pb, Cr+6, Hg, Cd, PBB, PBDE)	ELV directive (Pb, Cr+6, Hg, Cd)	PVC	Halogen Flame Retardant Free (Cl, Br)	RoHS 3 directive (DEHP, BBP, DBP, DIBP)	etc.
SM	N.D.	N.D.	N.D.	N.D.	N.D.	

* N.D. : Not Detected or Within Permitted Range